Truebore Pistol & Rifle Club: Produced by Q.E.D. SERVICES St Albans Ltd 2000

SHOT	ELEV	WIND	CALL	SCORE
A				
B				
1				
2				
3				
4				
5				
6				
7				
8				
9				
10				
11				
12				
13				
14				
15				
SCORE				

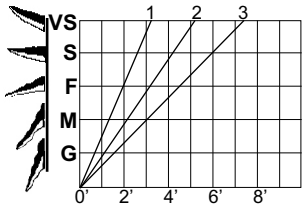

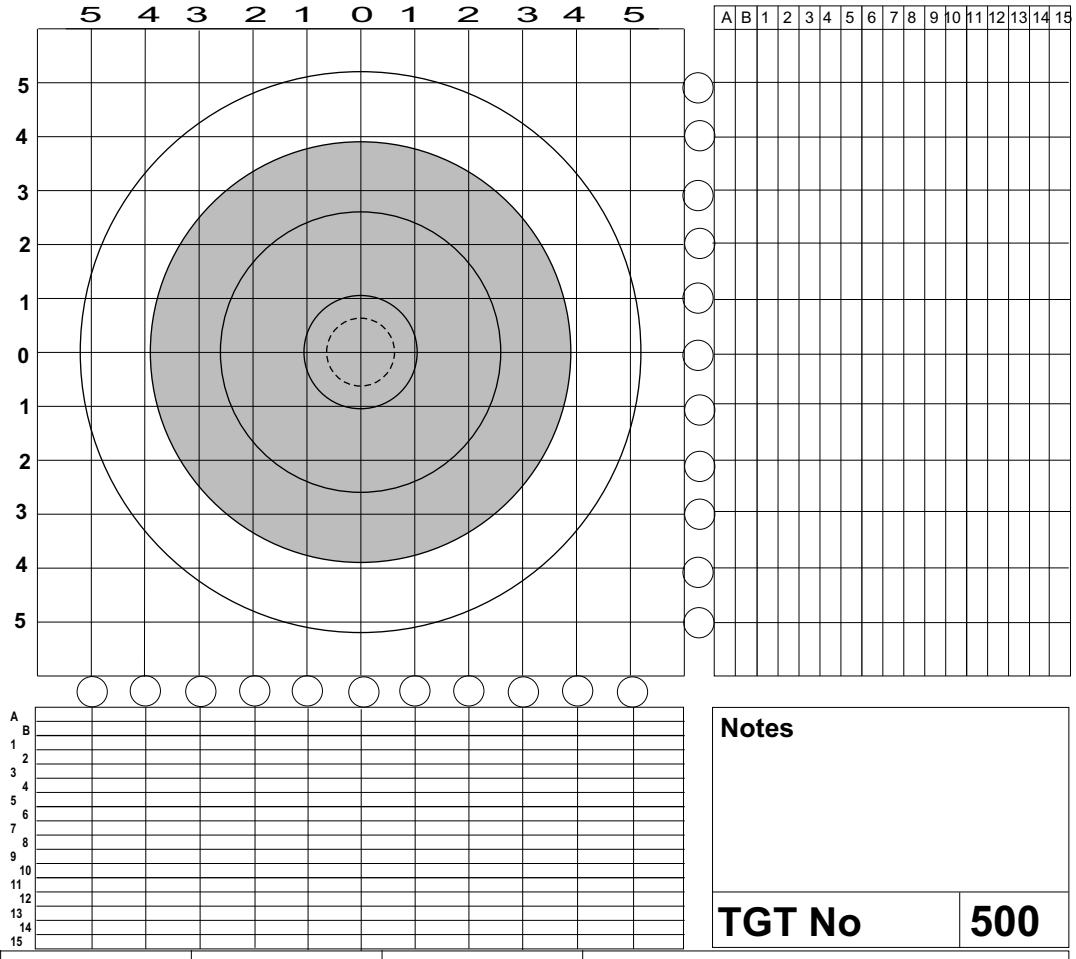

Notes

TGT No **500**

EVENT	Place	Date	Time	Weather
Rifle	Ammunition		Element Size & Type	Front / Rear

Truebore Pistol & Rifle Club: Produced by Q.E.D. SERVICES St Albans Ltd 2000

SHOT	ELEV	WIND	CALL	SCORE
A				
B				
1				
2				
3				
4				
5				
6				
7				
8				
9				
10				
11				
12				
13				
14				
15				
SCORE				

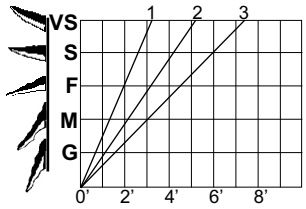

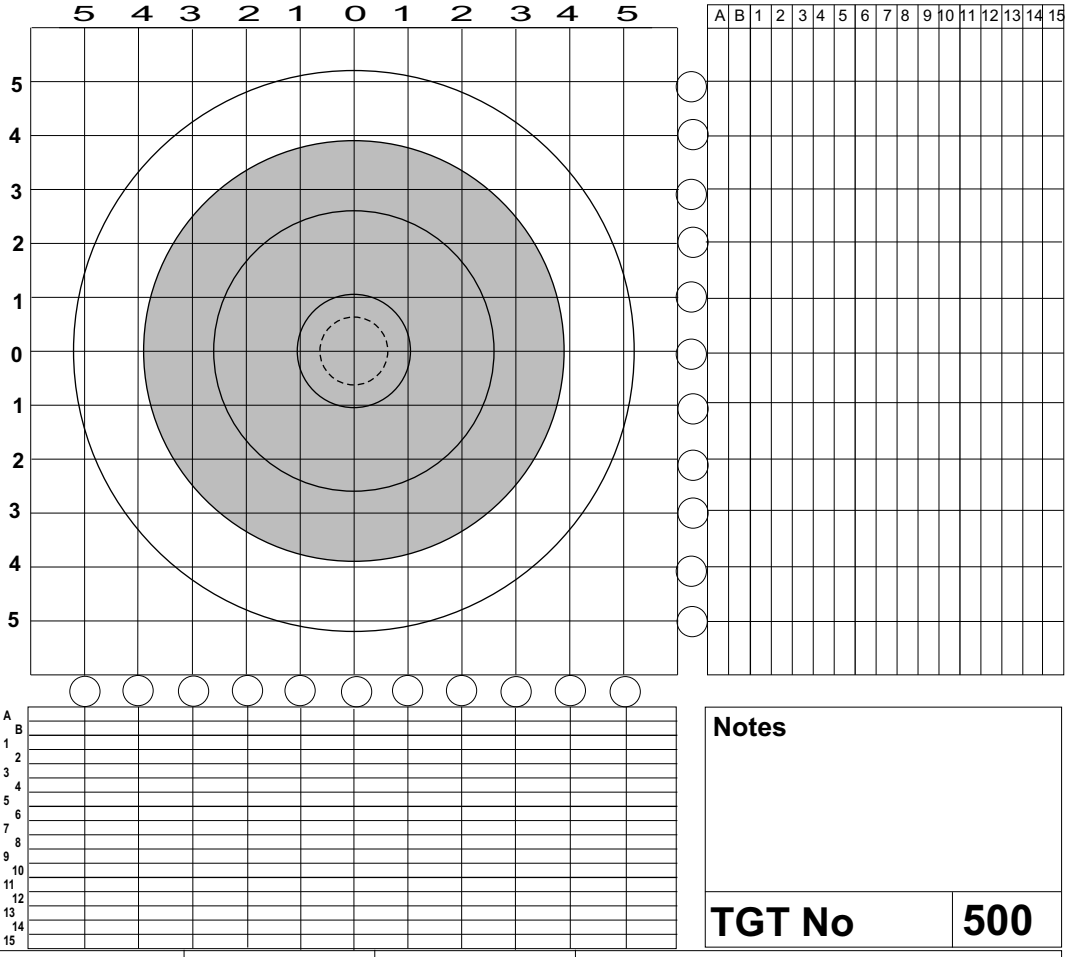

Notes

TGT No **500**

EVENT	Place	Date	Time	Weather
Rifle	Ammunition		Element Size & Type	Front / Rear